FREE SAMPLE | Buy the complete pack at notesbazar.in | page 1 of 38

CLASS 12 · CBSE PHYSICAL EDUCATION (048)

# Physical Education Solved Board Papers

Chapter-wise and year-wise CBSE board questions with complete answers

**2016–2026**

- ✓ Part A: every question sorted unit-wise, grouped by marks, with full answers
- ✓ Part B: complete board papers, each followed by its answers
- ✓ Board weightage table and most-asked topics for every unit
- ✓ Fixtures, tables and case studies worked out in full
- ✓ Visually impaired alternatives answered too

notesbazar.in

FREE SAMPLE | Buy the complete pack at notesbazar.in | page 2 of 38



WHAT YOU GET

# CBSE Physical Education papers 2016–2026. Every question answered. Sorted unit-wise.

| 13 | 422 | 9 | 10 | 197 |
|---|---|---|---|---|
| board papers | solved questions | years · 2016–26 | chapters | MCQs solved |

| | |
|---|---|
| ✗ Questions scattered across years | → ✓ All in one place, unit-wise |
| ✗ Don't know what to study first | → ✓ Weightage + most-asked topics |
| ✗ Fixture questions confuse | → ✓ Every fixture worked out |
| ✗ Short answers lose marks | → ✓ Answers written the board way |

**PART A — A — Chapter-wise**

- ✓ Weightage table
- ✓ Most-asked topics
- ✓ Every question + solution

**PART B — B — Full papers**

- ✓ Exactly as set by CBSE
- ✓ Solutions after each paper
- ✓ Timed 3-hour practice

| | | | | |
|---|---|---|---|---|
| **2026** · 048 | **2026** · 048 | **2025** · 048 | **2025** · 048 | **2024** · 048 |
| **2024** · 048 | **2023** · 048 | **2023** · 048 | **2022** · 048 | **2020** · 048 |
| **2019** · 048 | **2017** · 048 | **2016** · 048 | | |

Notes Bazar
Complete Notes · Solved PYQs
CLASS 6–12 · ALL SUBJECTS

100% QUESTIONS SOLVED

Made for board toppers



FREE SAMPLE | Buy the complete pack at notesbazar.in | page 3 of 38



# How to use this book

**Part A** puts every board question of a unit together, from 1-mark MCQs to 5-mark long answers. Finish a unit in your notes, then answer its Part A questions without looking at the answers. Check, mark the ones you got wrong, and repeat them a week later.

Each question shows where it was asked, for example **CBSE 2026 · 048 · Q31**. Use the weightage table and the most-asked topics chart at the start of each unit to decide what to revise first.

**Part B** gives full papers. In the last month before the exam, sit with a clock and write one paper in 3 hours, then check it with the answers that follow the paper.

Answers are written the way the board awards marks: name the term, define it, then give the points, steps or examples. For fixtures, show the method (knock-out or cyclic) and the formula used.

# Contents

## Part A · Chapter-wise questions with solutions

1. Management of Sporting Events 44 Qs
2. Children and Women in Sports 53 Qs
3. Yoga as Preventive Measure for Lifestyle Disease 39 Qs
4. Physical Education and Sports for CWSN 41 Qs
5. Sports and Nutrition 42 Qs
6. Test and Measurement in Sports 38 Qs
7. Physiology and Injuries in Sports 41 Qs
8. Biomechanics and Sports 39 Qs
9. Psychology and Sports 34 Qs
10. Training in Sports 51 Qs

## Part B · Full board papers, each followed by its solutions

1. CBSE 2026 · 048 solutions
2. CBSE 2026 · 048 solutions
3. CBSE 2025 · 048 solutions
4. CBSE 2025 · 048 solutions
5. CBSE 2024 · 048 solutions
6. CBSE 2024 · 048 solutions
7. CBSE 2023 · 048 solutions
8. CBSE 2023 · 048 solutions
9. CBSE 2022 · 048 solutions
10. CBSE 2020 · 048 solutions
11. CBSE 2019 · 048 solutions
12. CBSE 2017 · 048 solutions
13. CBSE 2016 · 048 solutions

422 questions in all. Questions are taken from the CBSE Class 12 Physical Education (048) board papers we could get for 2016 to 2026: the main papers of 2016, 2017, 2019, 2020 and 2023 to 2026, and the compartment papers of 2022 to 2026. CBSE publishes one paper a year (no sets), the 2021 exams had no board paper, and no 2018 or 2022 main paper is available. Answers are our own, checked against the official CBSE marking schemes wherever the board published one; the 2017 and 2023 papers have no published scheme, so those answers are written from the NCERT textbook. Every question on the 2026-27 syllabus is mapped to its unit; questions on topics that are no longer in the syllabus are marked in Part B and left out of Part A, where they are still fully answered.

FREE SAMPLE | Buy the complete pack at notesbazar.in | page 4 of 38



CHAPTER 1

# Management of Sporting Events

## Board weightage 2016–2026

| Year | 2016 | 2017 | 2019 | 2020 | 2022 | 2023 | 2024 | 2025 | 2026 |
|---|---|---|---|---|---|---|---|---|---|
| Questions per paper | 3 | 2 | 3 | 4 | – | 4 | 4 | 4 | 4 |
| Marks per paper | 7 | 4 | 7 | 10 | – | 9 | 9 | 9 | 9 |

## Most asked topics

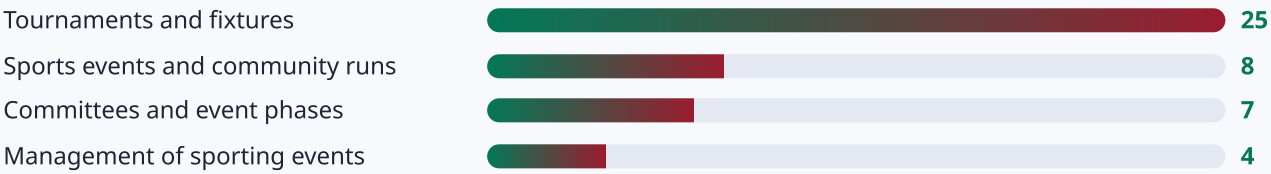


44 different questions from 12 papers. Repeated questions are shown once with every year they were asked.

## 1 mark: MCQ and Assertion–Reason

CBSE 2026 · 048 · Q1 — 1 mark

Which of the following is the next step after planning the sports event ?

(A) Staffing
(B) Directing
(C) Controlling
(D) Organising

### Solution

The functions of sports event management come in the order planning → organising → staffing → directing → controlling. After deciding what to do (planning), the work is divided and resources arranged (organising). **(D) Organising**

CBSE 2026 · 048 · Q2 — 1 mark

_____ is an event to showcase children and youth's abilities and prowess on the sports field.

(A) Run for Fun
(B) Run for a specific cause
(C) Sports Day
(D) Health Run

### Solution

Sports Day is the annual school or community event that showcases the abilities and prowess of children and youth, and also lets community members meet and interact. The runs are for health, fun or a cause, not for showcasing skill. **(C) Sports Day**

FREE SAMPLE | Buy the complete pack at notesbazar.in | page 5 of 38



CBSE 2026 · 048 · Q12 — 1 mark

The arrangement of entertainment, decoration, etc., is the responsibility of the _____ Committee. (A) Finance (B) Technical (C) Logistics (D) Marketing (1)

**Solution**

The logistics committee arranges the venue, transport, accommodation, food, decoration, entertainment, first aid and sound system. **(C) Logistics**

CBSE 2026 · 048 · Q15 — 1 mark

Which type of tournament promotes mass participation and curriculum integration through sports ? (A) Intramural (B) League (C) Round Robin (D) Extramural (1)

**Solution**

Intramural tournaments are held within one institution; they involve all students and fit with the curriculum. **(A) Intramural**

CBSE 2025 · 048 · Q1 — 1 mark

Which one of the following is a post-competition responsibility of the technical committee ?

(A) Requisition to purchase equipment
(B) Arrangement of equipment and stationery
(C) Arrangement of officials
(D) Maintenance of the field

**Solution**

(A), (B) and (C) are done **before** the event. After the event the technical committee arranges cleaning and layout of the fields, maintenance of the field and returning equipment to the store. **(D) Maintenance of the field**

CBSE 2025 · 048 · Q2 — 1 mark

Which of the following is an objective of Intramural tournaments ?

(A) To achieve high performance at the highest level of the tournament.
(B) To develop the feeling of integration with other institutions.
(C) To provide opportunities for choosing a career in sports.
(D) To promote health and recreation at the institution.

**Solution**

(A), (B) and (C) are objectives of **extramural** tournaments. Intramurals aim at mass participation, health, fitness and recreation within the institution. **(D)**

CBSE 2025 · 048 · Q1 — 1 mark

Seeding is decided on the basis of : (A) Previous Performance (B) Future Performance (C) Current Performance (D) Bad Performance (1)

**Solution**

FREE SAMPLE | Buy the complete pack at notesbazar.in | page 6 of 38



In seeding, good teams are placed in different halves or pools according to their ranking or **previous performance**, so that they do not meet in the early rounds. **(A)**

CBSE 2025 · 048 · Q2 — 1 mark

In a knock-out tournament, if byes are in odd numbers, then number of byes in lower half is calculated by : (A) (NB + 1)/2 (B) (NB – 1)/2 (C) NB/2 (D) NB – 1 (1)

***Solution***

When the total number of byes (NB) is odd, the lower half gets one more bye than the upper half. Lower half byes = **(NB + 1)/2** and upper half byes = (NB – 1)/2. **(A)**

CBSE 2024 · 048 · Q5 — 1 mark

Given below are functions of Sports Management in List-I and their Explanation in List-II :

| List – I | List – II |
|---|---|
| I. Planning | 1. It is a function of guiding, inspiring and instructing people to accomplish organizational goals. |
| II. Controlling | 2. Preparing a layout for the future course of action. |
| III. Directing | 3. Ensuring that proper talent is serving that specific job. |
| IV. Staffing | 4. Establishing performance standards, measuring actual performance and comparing them for irregularities. |

Match the items of List-I with List-II and choose the correct option from the following :

| | I | II | III | IV |
|---|---|---|---|---|
| (a) | 1 | 2 | 3 | 4 |
| (b) | 1 | 2 | 4 | 3 |
| (c) | 2 | 4 | 1 | 3 |
| (d) | 2 | 4 | 3 | 1 |

***Solution***

Planning = layout of the future course (2); controlling = standards, measuring and comparing (4); directing = guiding and inspiring (1); staffing = right talent for the job (3). I-2, II-4, III-1, IV-3. **(c)**

CBSE 2024 · 048 · Q11 — 1 mark

Which of the following is the objective of Intramural competition ?

(a) To achieve high performance
(b) To provide career opportunities
(c) To promote health and fitness
(d) To promote cultural and economic development

***Solution***

(a), (b) and (d) are objectives of extramural competitions. Intramurals focus on fitness, wellness and health of all students. **(c)**

FREE SAMPLE | Buy the complete pack at notesbazar.in | page 7 of 38



CBSE 2024 · 048 · Q6 — 1 mark

Given below are the options for number of participating teams in a tournament. Which option will have highest number of 'Byes' while drawing a fixture ? (A) 17 (B) 18 (C) 19 (D) 20 (1)

**Solution**

In a knock-out fixture, byes = (next power of 2) – (number of teams). For 17 to 20 teams the next power of 2 is 32. Byes: 17 gives 15, 18 gives 14, 19 gives 13, 20 gives 12. The highest is for 17 teams. **(A) 17**

CBSE 2024 · 048 · Q13 — 1 mark

Preparing budget of the tournament and maintaining a record of income and expenditure of the tournament are the responsibilities of which committee ? (A) Technical (B) Finance (C) Transport (D) Medical (1)

**Solution**

The finance committee prepares the budget, collects funds and keeps the accounts of income and expenditure. **(B) Finance**

CBSE 2023 · 048 · Q13 — 1 mark

How many total matches will be played in a knock-out fixture of 19 teams ?

(a) 18 (b) 17
(c) 20 (d) 16

**Solution**

In a knock-out tournament every match removes one team, so matches = N − 1 = 19 − 1 = 18. **(a) 18**

CBSE 2023 · 048 · Q14 — 1 mark

Knock-out tournament is also known as _____.

(a) Elimination tournament (b) Round-robin tournament
(c) League tournament (d) Challenge tournament

**Solution**

A team that loses is eliminated from the competition, so a knock-out tournament is also called an **(a) elimination tournament**. Round-robin and league mean the same thing (every team plays every other team).

CBSE 2023 · 048 · Q1 — 1 mark

Rules and regulations of a sports tournament are the responsibility of _____ Committee. (a) Technical (b) Logistics (c) Marketing (d) Finance (1)

**Solution**

FREE SAMPLE | Buy the complete pack at notesbazar.in | page 8 of 38



The technical committee frames the rules and regulations, gets the playing areas and equipment ready, appoints officials and prepares the fixtures. **(a) Technical**

CBSE 2023 · 048 · Q13 — 1 mark

How many matches will be played in the 2nd round of a knockout tournament if 17 teams are participating ? (a) 6 (b) 7 (c) 8 (d) 5 (1)

***Solution***

For 17 teams the next power of 2 is 32, so byes = 32 – 17 = 15. Only 17 – 15 = 2 teams play in round 1 (1 match). After round 1 there are 15 bye teams + 1 winner = 16 teams, so the 2nd round has 16 ÷ 2 = **(c) 8 matches**.

CBSE 2020 · 048 · Q1 — 1 mark

The total number of matches in a knock out tournament of 34 teams are

(a) 31 (b) 32
(c) 33 (d) 35

***Solution***

In a knock-out tournament every match eliminates exactly one team, so matches = N − 1 = 34 − 1 = 33. **(c) 33**

CBSE 2020 · 048 · Q2 — 1 mark

The primary goal of Intramural competition is

(a) To provide opportunity for mass participation of students
(b) To participate in inter-school competition
(c) To provide intra-school competition
(d) All of the above

***Solution***

Intramural competitions are held within one institution, with the aim of giving every student the chance to take part (mass participation), health and recreation. Taking part in inter-school competition is the aim of extramurals. **(a)**

CBSE 2019 · 048 · Q1 — 1 mark

What do you understand by 'Planning in Sports' ? (1)

***Solution***

**Planning in sports** is an intellectual process of thinking in advance: deciding the goals to be reached and the future course of action, and developing the strategies needed to attain those goals efficiently in the field of sports. It is the first function of sports management.

CBSE 2019 · 048 · Q7(b) — 1 mark

Give two objectives of Extramural activities. (½ + ½ = 1)

***Solution***

FREE SAMPLE | Buy the complete pack at notesbazar.in | page 9 of 38



Any two: (1) to improve the standard of sports; (2) to provide an enriching experience to students; (3) to broaden the base of sports; (4) to give knowledge of new rules and advanced techniques.

CBSE 2017 · 048 · Q1 — 1 mark

Fixtures are the schedule, fixed for the matches. What is a Bye ? (1)

**Solution**

A **bye** is a free pass to the next round given to a team without playing a match in that round. It is given when the number of teams is not a power of 2 (4, 8, 16, 32 ...), so that from the second round the number of teams is a power of 2. Number of byes = next power of 2 − number of teams.

CBSE 2016 · 048 · Q1 — 1 mark

What is 'Seeding' in Fixture for Tournaments ? (1)

**Solution**

In seeding, the strong (good) teams or players are placed in the fixture, on the basis of their ranking or earlier performance, in different halves or quarters, so that they do not meet each other in the first round.

## 2 marks: very short answer

CBSE 2024 · 048 · Q19 — 2 marks

Briefly explain 'Health Run'. (2)

**Solution**

Health runs are conducted to improve the health standard of society and to create awareness of the importance of physical activity for good health, or to raise charity. The aim of the runners is not to win but to take part. A large number of registrations gives it full impact. There is no age bar and it is not a professional race, so the distance need not be long. NGOs or health departments organise them to spread awareness about health issues.

CBSE 2023 · 048 · Q19 — 2 marks

Explain any two functions of marketing committee, before and during the sports competition. (2×1 = 2)

**Solution**

(1) **Before the competition**: it prepares publicity material (posters, banners, pamphlets) and advertises the event through newspapers, radio, TV and social media; it also looks for sponsors and arranges funds with the finance committee. (1)
(2) **During the competition**: it manages the sale of tickets, souvenirs and refreshments, gives publicity to the sponsors' products (stalls, hoardings), and arranges press and media coverage of the matches. (1)

FREE SAMPLE | Buy the complete pack at notesbazar.in | page 10 of 38



## 3 marks: short answer

CBSE 2026 · 048 · Q25 — 3 marks

Compare and contrast the intramural and the extramural tournament.

**Solution**

| basis | intramural | extramural |
|---|---|---|
| meaning | organised **within the walls** of one institution (between houses, classes, hostels) | organised **outside the walls**, between two or more institutions (zonal, district, state, national) |
| main aim | to encourage **mass participation** and promote health and recreation | to achieve **high performance** at the highest level |
| feeling developed | integration **within** the institution (group cohesion) | integration **with other** institutions (socialisation) |
| who takes part | all students, not only players | selected players or teams (often chosen through intramurals) |

**Similarity**: both are tournaments that develop fitness, fair play, leadership and sporting values; intramurals are the base for selecting teams for extramurals.

CBSE 2026 · 048 · Q26 — 3 marks

Differentiate between knockout and league tournaments. (3)

**Solution**

| basis | knockout tournament | league tournament |
|---|---|---|
| playing | a team continues to play until it is defeated | every team gets an equal chance to play with every other team |
| result | good teams or players can be eliminated at an early stage | the true winner emerges from this format |
| cost | less expensive | more expensive |

(Any three points for each, or any other relevant point.)

CBSE 2025 · 048 · Q25 — 3 marks

"The organisation of its community sports reflects the progress of any country." In the context of this statement, outline 'Run for a specific cause' and 'Run for unity'.

**Solution**

**Run for a specific cause**: conducted to spread awareness among the masses about a social issue, such as cleanliness, a green environment, cancer, AIDS or gender inequality, or to raise charity for it. Participants run to support the cause, not to win; large participation gives the message wide reach.

**Run for Unity**: conducted to foster peace and promote integrity and brotherhood in the community, state and nation and among different religions. People of all ages and backgrounds run together, which builds bonding and a sense of togetherness across social and economic

FREE SAMPLE | Buy the complete pack at notesbazar.in | page 11 of 38



barriers.
Both show a country's progress because a healthy, aware and united community is the base of national development.

CBSE 2025 · 048 · Q25 — 3 marks

Differentiate between Knock-out and League tournament. (1½+1½ = 3)

*Solution*

| knock-out | league |
|---|---|
| a team continues to play matches until it is defeated | every team gets an equal chance to play with every other team |
| good teams can be eliminated at an early stage | the true winner emerges from this format |
| less expensive | more expensive |
| requires less time | requires more time |
| seeding can be used | no provision of seeding |
| also called elimination tournament | also called round robin tournament |

(Any three differences.)

CBSE 2024 · 048 · Q27 — 3 marks

Explain the responsibilities of any two committees during sports competition.

*Solution*

**Technical committee** (during the event): conducts matches on time with the selected officials (referees, umpires, judges, timekeepers); ensures the presence of the jury; keeps fields cleaned and laid out; collects score sheets and other papers from officials; prepares the merit list and results.
**Logistics committee** (during the event): conducts the opening and closing ceremonies; checks registration; distributes refreshments; manages spectators; hands over medals and certificates; transports players from their place of stay to the field and back; provides first aid and medical help.
(Also acceptable: **finance**: checks inflow and outflow of money, pays officials; **marketing**: issues press releases, works with the media, fulfils sponsors' requirements, arranges telecast.)

CBSE 2023 · 048 · Q27 — 3 marks

Briefly explain the functions of Directing and Controlling to organize sports event. (1.5+1.5)

*Solution*

**Directing**: guiding, instructing, motivating and supervising the people who work for the event so that the plan is carried out. It includes giving orders and clear instructions, leadership, motivation, communication and coordination between committees. Without it the staff would not know what to do or how to do it.
**Controlling**: checking whether the work is going as planned. Steps: set standards (targets, budget, schedule), measure actual performance, compare it with the standard, and take corrective

FREE SAMPLE | Buy the complete pack at notesbazar.in | page 12 of 38



action when there is a gap. It keeps the event on time and within budget and helps to avoid mistakes in future events.

CBSE 2020 · 048 · Q22 — 3 marks

League tournament is a better way to judge the best team of the tournament. Comment. (3)

***Solution***

Yes. In a league (round robin) tournament every team plays every other team, so: (1) every team gets the maximum opportunity to show its efficiency, and one bad day does not send a team out, unlike a knock-out where one defeat ends the participation; (2) many matches give the teams and players ample opportunity to improve their performance and learn; (3) the ranking is decided on the matches or points won over all the games, which gives a fair and reliable result, so the team at the top is truly the best. (The drawback is that it needs more time, money and facilities.)

CBSE 2017 · 048 · Q12 — 3 marks

Write three differences between Intramurals and Extramurals. (3)

***Solution***

| basis | intramurals | extramurals |
|---|---|---|
| meaning | competitions held among the students within one institution (intra = within) | competitions held between different institutions (extra = outside) |
| participants | all the students of the same school or college | selected, best players representing the institution |
| aim | mass participation, health, recreation and fitness | higher performance, to improve the standard of sports and to win |
| level of competition | local, limited | wider, tougher, with experience of new rules and techniques |

CBSE 2016 · 048 · Q15 — 3 marks

Draw a fixture of 6 teams on league basis following the cyclic method. (3)

***Solution***

Number of teams N = 6 (even). Number of matches = N(N − 1) ÷ 2 = 6 × 5 ÷ 2 = **15**. Number of rounds = N − 1 = 6 − 1 = **5** (three matches in each round).

| I Round | II Round | III Round | IV Round | V Round |
|---|---|---|---|---|
| 6 v 1 | 5 v 1 | 4 v 1 | 3 v 1 | 2 v 1 |
| 5 v 2 | 4 v 6 | 3 v 5 | 2 v 4 | 6 v 3 |
| 4 v 3 | 3 v 2 | 2 v 6 | 6 v 5 | 5 v 4 |

Team 1 stays fixed; the other teams move round one place in each round. Every team meets every other team exactly once (5 rounds × 3 matches = 15 matches).

FREE SAMPLE | Buy the complete pack at notesbazar.in | page 13 of 38



CBSE 2016 · 048 · Q16 — 3 marks

Your school is organising 'Run for Unity', explain the responsibilities of accreditation, technical and finance committee. (1×3 = 3)

*Solution*

**Accreditation committee** (any one explained): management of the accreditation centres during the event; registering all participants who have an operational role; production and distribution of the validation passes (identity cards); fixing the access rights and privileges of each participant.
**Technical committee** (any one): to ensure that the field of play (the route) is safe for runners and officials; to apply the rules fairly, without fear or favour; to ensure the quality of the equipment (timing devices, barricades, signs) and to arrange the officials.
**Finance committee** (any one): budgeting and financial planning for the run; keeping accounts and financial reports; monitoring spending, internal control and accountability.

FREE SAMPLE | Buy the complete pack at notesbazar.in | page 14 of 38



## 4 marks: case-based

CBSE 2026 · 048 · Q31 — 4 marks

Anita prepared a fixture based on the league competition. She distributed this fixture to the coaches of all the teams. When Khushi received this fixture, it was misprinted and showed only the matches of rounds three and four. According to the above statement, study the fixture given below.

| III Round | | IV Round | |
|---|---|---|---|
| 5 | Bye | 4 | Bye |
| 4 | 6 | 3 | 5 |
| 3 | 7 | 2 | 6 |
| 2 | 1 | 1 | 7 |

Based on the above fixture and your previous knowledge answer the following questions :

(i) In which round the match between number 4 and 3 teams will be held ?

(ii) How many rounds will be played in the tournament ?

(A) 6 (B) 7

(C) 5 (D) 4

(iii) In which round team number 2 will get a bye ?

(iv) How many matches will be played in the above fixture ?

(A) 21 (B) 23

(C) 19 (D) 18

**OR**

(iv) The other name for a league tournament is _____ .

**(For Visually Impaired Candidates only)**

Keshav, the general secretary of Kabaddi Association of Maharashtra was given the responsibility to organise State level Kabbaddi tournament. He formed four committees i.e., technical committee, finance committee, logistics committee and marketing committee to organise the event systematically and smoothly.

Based on the above case and your previous knowledge, answer the following questions :

(i) Which of the following committee is responsible for publishing the news ?

(A) Technical committee (B) Finance committee

(C) Logistics committee (D) Marketing committee

(ii) Which committee is responsible for maintaining the play fields while organising the tournament ?

(A) Marketing committee (B) Logistics committee

(C) Finance committee (D) Technical committee

(iii) Write any 2 post sports event responsibilities of finance committee ?

**OR**

(iii) Purchase of sports equipment is a function of the _____ committee.

(A) Logistics (B) Finance

(C) Marketing (D) Technical

FREE SAMPLE | Buy the complete pack at notesbazar.in | page 15 of 38



(iv) _____ committee arranges refreshments, boarding and lodging.

**Solution**

The fixture is drawn by the **cyclic method** for **7 teams** (teams 1–7 appear, plus a bye because the number is odd). The bye stays fixed at the top right; in each round the other numbers move one place. Working backwards and forwards from rounds III and IV gives the full fixture:

| I | II | III | IV | V | VI | VII |
|---|---|---|---|---|---|---|
| 7–Bye | 6–Bye | 5–Bye | 4–Bye | 3–Bye | 2–Bye | 1–Bye |
| 6–1 | 5–7 | 4–6 | 3–5 | 2–4 | 1–3 | 7–2 |
| 5–2 | 4–1 | 3–7 | 2–6 | 1–5 | 7–4 | 6–3 |
| **4–3** | 3–2 | 2–1 | 1–7 | 7–6 | 6–5 | 5–4 |

(i) Teams 4 and 3 meet in the **first round**. (ii) For an odd number of teams, rounds = number of teams = 7. **(B) 7**. (iii) The bye passes to the next lower number each round (7, 6, 5, 4, 3, 2, 1), so team 2 gets the bye in the **sixth round**. (iv) Matches = n(n − 1)/2 = 7 × 6/2 = 21. **(A) 21**. **OR** (iv) **Round robin tournament**.

*VI alternative:* (i) Publicity, press releases and media work belong to the **(D) Marketing committee**. (ii) Layout, cleaning and maintenance of fields is done by the **(D) Technical committee**. (iii) After the event the finance committee (1) examines all records related to the settlement of bills, and (2) keeps track of accounts and prepares the financial report. **OR** (iii) **(B) Finance**: the finance committee purchases equipment, stationery, medals and certificates as requisitioned by other committees. (iv) **Logistics** committee (refreshment, boarding and lodging, transport).

CBSE 2026 · 048 · Q31 — 4 marks

Kendriya Vidyalaya organized a national badminton championship at its school. Students of Class 12 were given various responsibilities to manage the championship. Different work was divided among different teams of students who looked after the tournament. The budget for the championship was collected through different sponsors, while the various groups were formed by identifying the qualities of the students so that the right person might be assigned the right work. To make the event popular, various media platforms were used and managed by the students under the supervision of a teacher.

Answer the following questions based on the above case and your prior knowledge : (4×1 = 4)

(i) "Giving the right person the right work" comes under which function of Sports Management ?
(A) Planning (B) Organizing (C) Staffing (D) Directing

(ii) Which committee is involved in the budgeting of the championship ? (A) Finance committee (B) Medical committee (C) Logistics committee (D) Purchase committee

(iii) Organizing a championship is a big task and _____ is the backbone of the perfect execution of the championship. (A) Planning (B) Controlling (C) Staffing (D) Directing

(iv) Supervision by a teacher while students manage various media platforms is an example of _____. (A) Staffing (B) Organizing (C) Accounting (D) Directing

**Solution**

(i) Staffing is selecting and placing the right person on the right job. **(C) Staffing**. (ii) The finance committee prepares the budget and arranges funds, sponsors and accounts. **(A) Finance committee**. (iii) Planning, deciding in advance what is to be done, when and how, is the base of the whole event. **(A) Planning** (as per the CBSE marking scheme). (iv) Directing is guiding,

FREE SAMPLE | Buy the complete pack at notesbazar.in | page 16 of 38



supervising and instructing people while they carry out the work. **(D) Directing** (the marking scheme shows "(A) (D) Directing"; option (A) is Staffing, so the key is (D)).

FREE SAMPLE | Buy the complete pack at notesbazar.in | page 17 of 38



CBSE 2025 · 048 · Q31 — 4 marks

Aarti prepared a fixture of 11 teams to conduct Kho-Kho tournament in her locality as shown below :

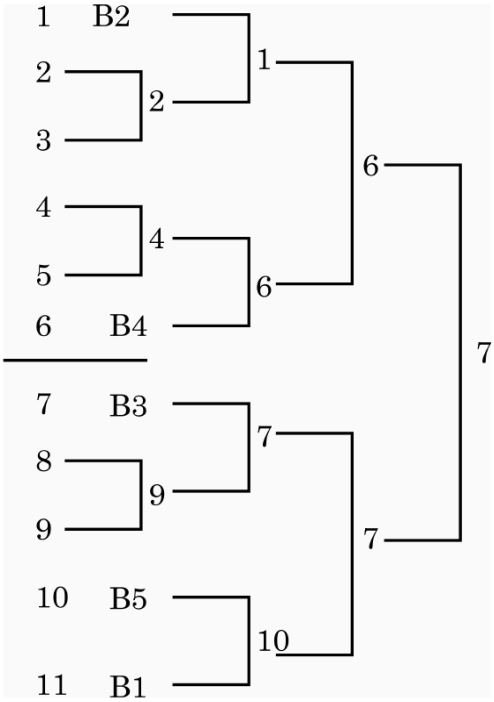


Based on the above given fixture, answer the following questions :

(i) What is the number of Non-bye teams in this tournament ?

(A) 06 (B) 07

(C) 08 (D) 09

(ii) If the above fixture had been of 48 teams, then the number of byes would have been _____.

(iii) $7^{th}$ match will be played between team number _____ and _____.

**OR**

Write the formula to calculate byes in lower half.

(iv) The provision in which good teams are placed in different half or pool, based on their ranking or previous performance not by allotment of draw, so that they do not play with other teams in the first round is known as _____.

(A) Bye (B) British method

(C) Seeding (D) American method

**(For Visually Impaired Candidates Only)**

Tarun's physical education teacher gave him the responsibility of organizing a Kabaddi competition in school. Tarun along with his classmates formed several committees and prepared a knockout fixture of 17 teams for the Kabaddi tournament. He faced many challenges in organizing the match, but finally, he was successful.

Answer the following questions based on the above case and your prior knowledge :

(i) How many matches will be played in this tournament ?

(ii) _____ saves cost and time and makes each match intensive because of fear of elimination.

(A) Knockout tournament (B) League tournament

(C) Round robin tournament (D) Combination tournament

(iii) Two team players got injured during the match, which committee will manage it ?

FREE SAMPLE | Buy the complete pack at notesbazar.in | page 18 of 38



(A) Logistics committee (B) Technical committee
(C) Finance committee (D) Marketing committee

(iv) Which formula was used to allot byes to the above teams in the lower half ?
**OR**
Which formula was used to allot byes to the above teams in the upper half ?

### Solution

Byes = 16 − 11 = **5** (B1–B5 in the fixture). (i) Non-bye teams = 11 − 5 = 6 (teams 2, 3, 4, 5, 8, 9). **(A) 06**. (ii) The next power of 2 above 48 is 64, so byes = 64 − 48 = **16**. (iii) Matches are numbered round by round from the top: round 1: 1st 2 v 3, 2nd 4 v 5, 3rd 8 v 9; round 2: 4th 1 v winner(2, 3), 5th winner(4, 5) v 6, 6th 7 v winner(8, 9), **7th 10 v 11** (both had byes). **OR** (iii) Byes in lower half = (NB + 1)/2, where NB = total number of byes. (iv) **(C) Seeding**.
*VI alternative:* (i) Matches in a knockout = N − 1 = 17 − 1 = **16**. (ii) **(A) Knockout tournament**. (iii) First aid and medical arrangements are part of the **(A) Logistics committee**. (iv) Lower half byes = **(NB + 1)/2**; here NB = 32 − 17 = 15, so the lower half gets 8. **OR** Upper half byes = **(NB − 1)/2** = 7.

CBSE 2025 · 048 · Q31 — 4 marks

In a badminton competition, there were 7 players. In the first round, 3 players were eliminated after they lost their matches. Based on this information and your prior knowledge, answer the following questions : (4)
(i) What type of tournament is mentioned above ? (A) Round Robin Tournament (B) Knock-out Tournament (C) Challenge Tournament (D) Knock-out Cum League Tournament
(ii) How many total matches will be played if it is a Round Robin tournament ? (A) 18 (B) 17 (C) 21 (D) 16
(iii) An advantage of knock-out tournament is : (A) It takes less time (B) Weak teams may enter the final (C) Strong teams may get eliminated (D) It is more expensive
(iv) The formula to calculate byes in the upper-half in a knock-out tournament is : (A) (N + 1)/2 (B) (N – 1)/2 (C) (NB + 1)/2 (D) (NB – 1)/2

### Solution

(i) Players who lose are out of the competition, so it is a **(B) knock-out tournament**. (ii) In a round robin, matches = N(N – 1)/2 = 7 × 6 ÷ 2 = **(C) 21**. (iii) Because losers are eliminated, fewer matches are needed and the tournament is completed in less time: **(A) It takes less time**. (iv) When the byes are odd, the upper half gets **(D) (NB – 1)/2** byes (and the lower half (NB + 1)/2).

FREE SAMPLE | Buy the complete pack at notesbazar.in | page 19 of 38



CBSE 2024 · 048 · Q33 — 4 marks

Study the fixture given below :

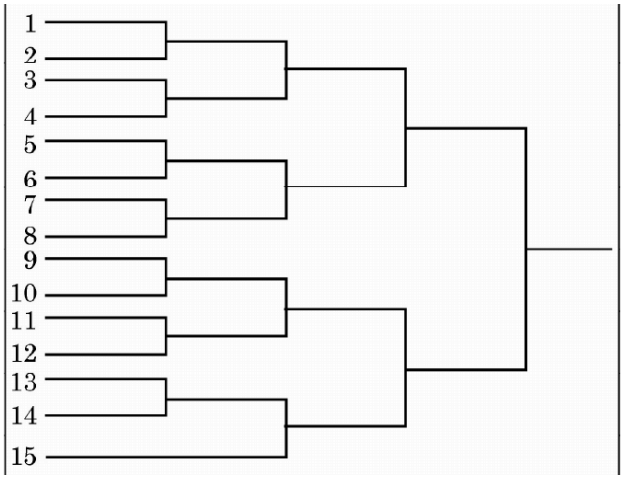


On the basis of the above study and your knowledge, answer the following questions :
(a) According to the above fixture total number of rounds will be _____.
(b) As shown in the fixture if the winner team plays least number of matches, then which number of team is the winner ?
(c) What is the formula for calculating number of matches in a knockout tournament ?
(d) If 16 teams are participating in a knockout tournament, then how many byes will be given to draw a knockout fixture ?
**OR**
(d) What is the formula for calculating total number of byes in a knockout tournament ?
**(For Visually Impaired Candidates Only)**
How 'Sports Day' and 'Health Run' contribute to spread health awareness and harmony ? Explain.

***Solution***

The fixture has 15 teams, so the next power of 2 is 16 and there is 16 − 15 = 1 bye (team 15). (a) 16 = $2^4$, so there are **4 rounds**. (b) Team **15**: it has the bye in round 1 and plays only round 2, the semi-final and the final (3 matches), while every other winner plays 4. (c) Number of matches = **N − 1**, where N = number of teams (here 14). (d) 16 is a power of 2, so **0 byes**. **OR** (d) Number of byes = **next higher power of 2 − number of teams** (e.g. 19 teams: 32 − 19 = 13).
*VI alternative:* **Sports Day**: celebrated by schools and communities every year, it focuses on physical and mental health beyond academics. It showcases the abilities of children and youth, gives everyone a chance to take part and enjoy recreation, and brings students, teachers, staff, parents and community members together to meet and interact. It builds leadership, management and coordination and teaches ethical values, spreading both health awareness and harmony.
**Health Run**: organised by social, government and non-government bodies and health and sports departments to create awareness about health and fitness (or to raise charity). The aim is participation, not winning; there is no age bar and no long distance, so people of all ages run together. This spreads the message of an active lifestyle and builds a sense of community.

FREE SAMPLE | Buy the complete pack at notesbazar.in | page 20 of 38



CBSE 2024 · 048 · Q31 — 4 marks

Study the table given below :

| I Round | | II Round | | III Round | | IV Round | | V Round | | VI Round | | VII Round | |
|---|---|---|---|---|---|---|---|---|---|---|---|---|---|
| 7 | Bye | 6 | Bye | 5 | Bye | 4 | Bye | 3 | Bye | 2 | Bye | 1 | Bye |
| 6 | 1 | 5 | 7 | 4 | 6 | 3 | 5 | 2 | 4 | 1 | 3 | 7 | 2 |
| 5 | 2 | 4 | 1 | 3 | 7 | 2 | 6 | 1 | 5 | 7 | 4 | 6 | 3 |
| 4 | 3 | 3 | 2 | 2 | 1 | 1 | 7 | 7 | 6 | 6 | 5 | 5 | 4 |

Based on the above study and your knowledge, answer the following questions : (4×1 = 4)

(a) League Tournament is also known as _____.

(b) Identify the method used in the above fixture.

(c) How many rounds will be played if 6 teams are participating in a league tournament ?

(d) How any matches are played is the above fixture ?

*(For Visually Impaired Candidates only)* What do you understand by intramural and extramural sports ? Write any two objectives for each. (2+½×4 = 4)

**Solution**

(a) **Round Robin** tournament. (b) The **cyclic method** (teams are arranged in two columns and rotated from round to round, with one team getting a bye in each round when the number of teams is odd). (c) For an even number of teams the number of rounds = N – 1 = 6 – 1 = **5 rounds**. (d) There are 7 teams, so each of the 7 rounds has 3 matches (one team has a bye): 3 × 7 = 7 × 6 ÷ 2 = **21 matches**.

*VI alternative* (2 + 2): **Intramural** ("within the walls"): a tournament conducted within one institution, school or community, between its own players. Objectives (any two): to encourage mass participation; to focus on all-round development of children; to develop fair play, respect and friendship; to give a first opportunity to compete in a controlled environment; to promote health and fitness; to promote curricular integration. **Extramural** ("outside the walls"): tournaments between two or more players or teams of different schools, colleges or institutions. Objectives (any two): to achieve high performance at the highest level; to develop a feeling of integration with other institutions; to provide opportunities for choosing a career in sports; to promote social, cultural and economic development through sports.

CBSE 2023 · 048 · Q31 — 4 marks

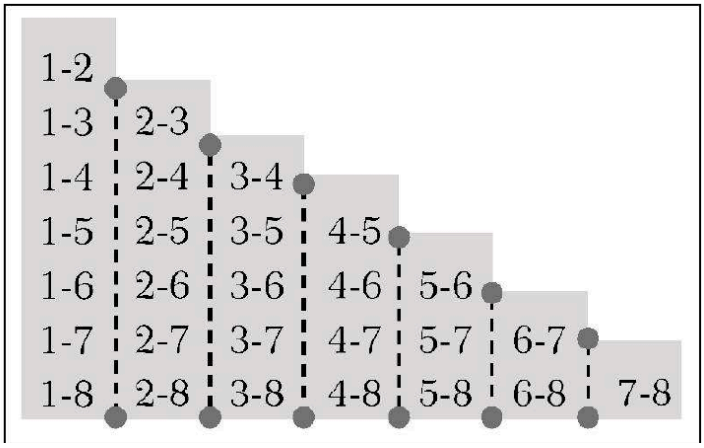


On the basis of above fixture, answer the following questions : (a) Which method is shown in the picture to draw fixture in league tournament ? (b) What is the formula to calculate number of matches ? (c) In league or Round Robin Tournament winner will be decided on the basis of _____. (d) If 7 teams participate in a league Tournament, _____ number of matches will be played. (4)
*(For Visually Impaired Candidates)* Explain the responsibilities of any four committees required to organize a sports event. (4)

**Solution**

(a) The **staircase method** (each column of matches forms a step; team 1 plays 2 to 8, team 2 plays 3 to 8 and so on). (b) Number of matches = **N(N − 1) ÷ 2**, where N is the number of teams (here 8 × 7 ÷ 2 = 28). (c) **points scored** (win = 2 or 3 points, draw = 1, loss = 0); the team with the most points is the winner. (d) 7 × 6 ÷ 2 = **21** matches.
*VI alternative* (any four): (1) **Technical committee**: arranges officials, equipment, field and fixtures. (2) **Finance committee**: prepares the budget, collects and spends funds, keeps accounts. (3) **Publicity committee**: advertises the event and prepares the programme, posters and press releases. (4) **Reception committee**: welcomes, seats and looks after guests and teams. (5) **Accommodation and food (logistics) committee**: arranges transport, stay, food, first aid and medical help. (6) **Ceremony committee**: plans the opening and closing ceremonies, prizes and certificates.

## 5 marks: long answer

CBSE 2023 · 048 · Q34 — 5 marks

Prepare a knockout fixture of 15 teams mentioning all the steps involved. (5×1 = 5)
**(For Visually Impaired Candidates Only)** Answer the following questions : (5×1 = 5)
(i) Calculate the number of matches if 15 teams are participating in a knockout tournament.
(ii) What is the formula to calculate the number of 'Byes' in a knockout tournament ?
(iii) What do you understand by Seeding ?
(iv) Name the methods used to prepare the fixtures in league tournaments.
(v) What is the formula to calculate the number of matches in a league tournament ?

**Solution**

FREE SAMPLE | Buy the complete pack at notesbazar.in | page 22 of 38



**Steps**: (1) Number of teams N = 15, which is odd. Total matches = N – 1 = 14. (1) (2) The nearest power of 2 above 15 is 16, so byes = 16 – 15 = **1**. (1) (3) Divide into halves: because N is odd, the upper half has (N + 1)/2 = 8 teams and the lower half (N – 1)/2 = 7 teams. (1) (4) Byes are placed at the end of the lower half (for an odd number, the lower half gets (NB + 1)/2 = 1 bye, the upper half (NB – 1)/2 = 0): team 15 gets the bye. (1) (5) Draw the fixture with 4 rounds: round 1 has 7 matches (1 v 2, 3 v 4, 5 v 6, 7 v 8, 9 v 10, 11 v 12, 13 v 14; team 15 has a bye), round 2 has 4 matches, the semi-finals 2 matches and the final 1 match: 7 + 4 + 2 + 1 = 14. (1)

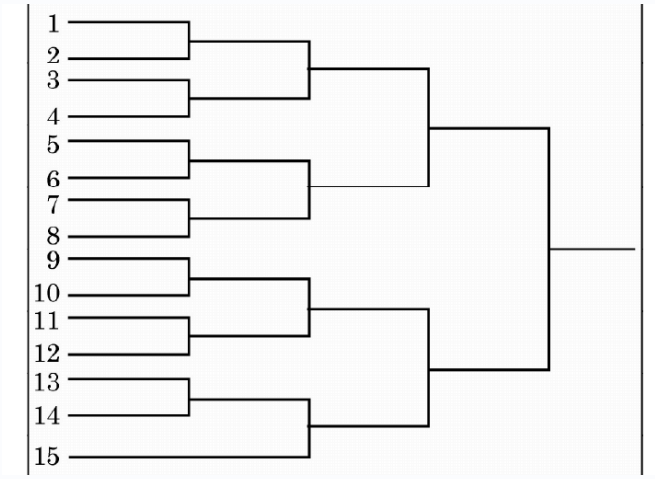


(Fixture of 15 teams: 7 matches in round 1 with team 15 on a bye, 4 matches in round 2, 2 semi-finals and the final.)

*VI alternative* (1 each): (i) N – 1 = 15 – 1 = **14 matches**. (ii) **Byes = (next power of 2) – N**, where N = number of teams. (iii) **Seeding**: placing the best teams (by previous performance or ranking) in different halves or quarters, by decision and not by draw, so that they do not meet in the early rounds. (iv) The **staircase method** and the **cyclic method** (also the tabular method). (v) Matches = **N(N – 1)/2**.

CBSE 2020 · 048 · Q31(b) — 5 marks

Draw a knock out fixture for 25 teams with all steps involved. (5)

### Solution

**Steps** (2): number of teams N = 25.

(1) Number of matches = N − 1 = 25 − 1 = **24**.

(2) The next power of 2 above 25 is 32, so the number of rounds = **5** ($2^5$ = 32).

(3) Number of byes = 32 − 25 = **7**.

(4) Teams in the upper half = (N + 1) ÷ 2 = 26 ÷ 2 = **13**; in the lower half = (N − 1) ÷ 2 = 24 ÷ 2 = **12**.

(5) Byes in the upper half = (byes − 1) ÷ 2 = (7 − 1) ÷ 2 = **3**; in the lower half = (byes + 1) ÷ 2 = (7 + 1) ÷ 2 = **4**.

(6) Byes are given in this order: 1st bye to the last team (25); 2nd to the first team (1); 3rd to the first team of the lower half (14); 4th to the last team of the upper half (13); then the 5th to the team above the 1st bye team (24), the 6th to the team below the 2nd bye team (2) and the 7th to the team below the 3rd bye team (15).

**Fixture** (3): the 9 matches M1 to M9 are played in round 1 (the 7 bye teams go straight to round 2), 8 matches in round 2, 4 in round 3, 2 in round 4 and the final M24 in round 5: 9 + 8 + 4 + 2 + 1 = 24.

FREE SAMPLE | Buy the complete pack at notesbazar.in | page 23 of 38



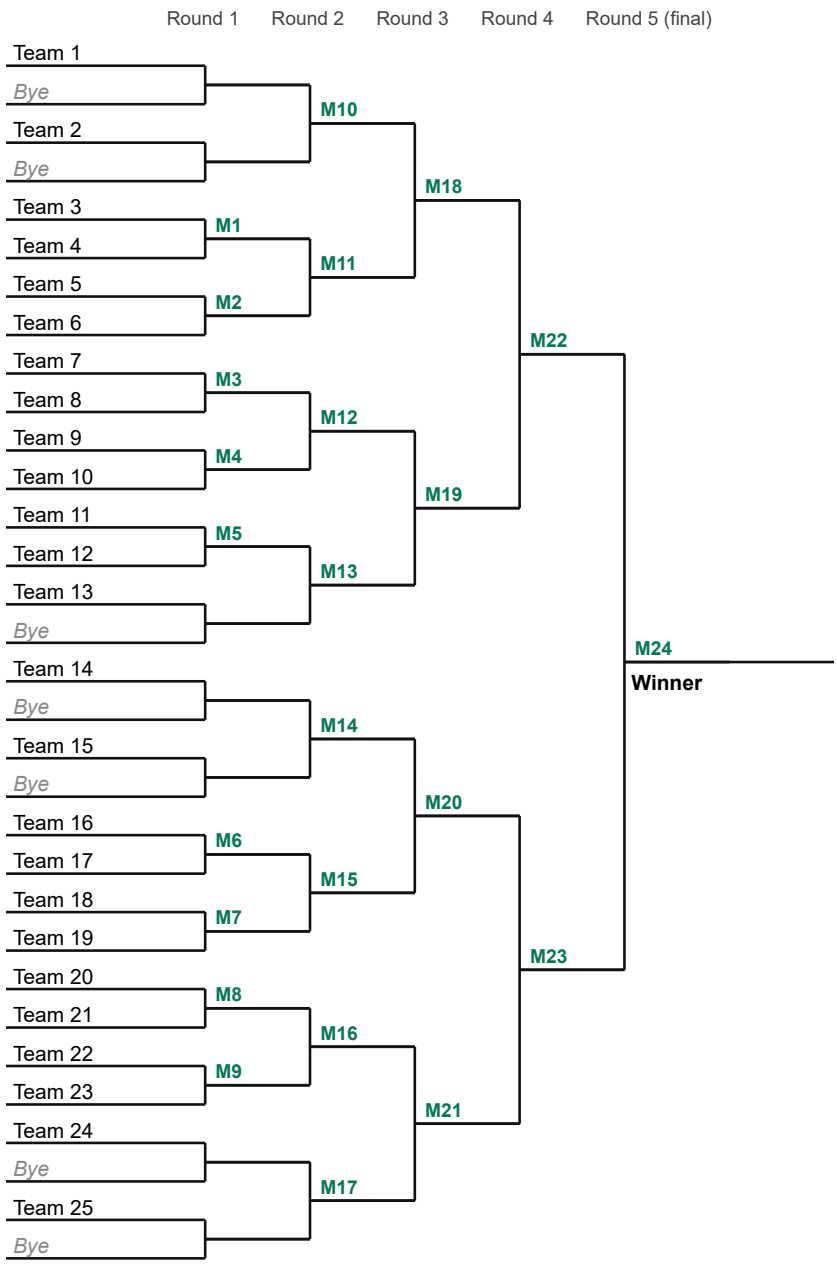


CBSE 2019 · 048 · Q20 — 5 marks

What is league tournament ? Draw a fixture of nine (9) teams on the basis of league tournament using cyclic method. Explain British method to declare the winner. (1+2+2 = 5)

### Solution

**League tournament**: a tournament in which each team plays every other team. In a single league each team plays the others once; in a double league each team plays the others twice. (1)
**Fixture of 9 teams (cyclic method)** (2): number of teams N = 9 (odd), so each round one team gets a bye: number of rounds = N = 9; number of matches = N(N − 1) ÷ 2 = 9 × 8 ÷ 2 = 36 (four matches in each round).

FREE SAMPLE | Buy the complete pack at notesbazar.in | page 24 of 38



| Round | Bye | Match 1 | Match 2 | Match 3 | Match 4 |
|---|---|---|---|---|---|
| I | 9 | 8 v 1 | 7 v 2 | 6 v 3 | 5 v 4 |
| II | 8 | 7 v 9 | 6 v 1 | 5 v 2 | 4 v 3 |
| III | 7 | 6 v 8 | 5 v 9 | 4 v 1 | 3 v 2 |
| IV | 6 | 5 v 7 | 4 v 8 | 3 v 9 | 2 v 1 |
| V | 5 | 4 v 6 | 3 v 7 | 2 v 8 | 1 v 9 |
| VI | 4 | 3 v 5 | 2 v 6 | 1 v 7 | 9 v 8 |
| VII | 3 | 2 v 4 | 1 v 5 | 9 v 6 | 8 v 7 |
| VIII | 2 | 1 v 3 | 9 v 4 | 8 v 5 | 7 v 6 |
| IX | 1 | 9 v 2 | 8 v 3 | 7 v 4 | 6 v 5 |

(Every team meets every other team exactly once; from round to round each team number moves down by one.)

**British method of declaring the winner** (2): the winner is decided on the percentage of points = (total points obtained ÷ total possible points) × 100. A win gives 2 points, a draw 1 point and a loss 0. Example: a team plays 8 matches, wins 6 and draws 2: points obtained = 6 × 2 + 2 × 1 = 14; possible points = 8 × 2 = 16; percentage = 14 ÷ 16 × 100 = **87.5%**. The team with the highest percentage is the winner.

FREE SAMPLE | Buy the complete pack at notesbazar.in | page 25 of 38



CBSE BOARD PAPER

# 2026 · Q.P. Code 048

Time: 3 hours
Maximum marks: 70

## Section A: Objective questions (1 mark each)

**1.** Which of the following is the next step after planning the sports event ? 1

(A) Staffing
(B) Directing
(C) Controlling
(D) Organising

**2.** _____ is an event to showcase children and youth's abilities and prowess on the sports field. 1

(A) Run for Fun
(B) Run for a specific cause
(C) Sports Day
(D) Health Run

**3.** Corrective exercises should be done under a _____ advice and supervision. 1

(A) Physician's or Physical Education teacher's
(B) Physical Education teachers' or Physiotherapists'
(C) Physical Education Teacher's or Coaches
(D) Physician's or Physiotherapist's

**4.** Which of the following asanas are practised to correct "Kyphosis" ? 1

(A) Chakrasan, Trikonasana, Adhomukhasana
(B) Dhanurasana, Bhujangasana, Halasana
(C) Bhujangasana, Trikonasan, Chakrasana
(D) Dhanurasana, Chakrasana, Bhujangasana

**5.** Gagan wants to prevent himself from asthma and hypertension. Identify the asanas to prevent him from these life style diseases. 1

(A) Uttan Mandukasana, Vakrasana
(B) Supta Vajarasana, Vakrasana
(C) Chakrasana, Uttan Mandukasana
(D) Vakrasana, Chakrasan

FREE SAMPLE | Buy the complete pack at notesbazar.in | page 26 of 38



**6.** Identify the asana : 1



(A) Ardh Matsyendrasana
(B) Dhanurasana
(C) Uttan Mandukasana
(D) Yogmudra

**(For Visually Impaired Candidates Only)**

Which one of the following positions is related to Yog Mudra ?

(A) Sit in Padmasana, clasp wrists over the head, bend forward and touch the forehead to the floor
(B) Sit in Padmasana, clasp wrists behind the back, bend forward and touch the forehead to the floor
(C) Sit in Vajrasana, clasp wrists behind the back, bend forward and touch the forehead to the floor
(D) Sit in Vajrasana, clasp wrists over the head, bend forward and touch the forehead to the floor

**7.** Which of the following competition was organised by Guttmann at the 1948 London Olympics for disabled persons ? 1

(A) Running competition
(B) Swimming competition
(C) Wheelchair competition
(D) Bicycle competition

**8.** The Oath: "Let me win. But if I cannot win, let me be brave in the attempt" is related to which of the following games ? 1

(A) Special Olympics
(B) Paralympics
(C) Deaflympics
(D) Summer Olympics

FREE SAMPLE | Buy the complete pack at notesbazar.in | page 27 of 38



**9.** Given below are the food groups in List-I with their functions in List-II. 1

| List-I (Food Group) | List-II (Functions) |
|---|---|
| (a) Protein | (i) These are the main sources of energy |
| (b) Carbohydrates | (ii) It is a negligible source of energy |
| (c) Fats | (iii) Repair body cells |
| (d) Roughage | (iv) It helps in transporting fat-soluble vitamins |

Match the items of List-I with List-II and choose the correct option from the following :

| | (a) | (b) | (c) | (d) |
|---|---|---|---|---|
| (A) | (i) | (ii) | (iii) | (iv) |
| (B) | (iv) | (iii) | (i) | (ii) |
| (C) | (iii) | (iv) | (i) | (ii) |
| (D) | (iii) | (i) | (iv) | (ii) |

**10.** Which of the following statement is correct regarding the Basal metabolic rate ? 1

(A) It is the number of calories needed to maintain energy level during exercise.

(B) It is the number of calories needed to maintain the body at movement.

(C) It is the number of calories needed to maintain body function at high speed.

(D) It is the number of calories needed to maintain body function at rest.

**11.** Which of the following is the long-term effect of exercise on the respiratory system ? 1

(A) Residual volume increases

(B) Respiratory rate increases

(C) Stroke volume increases

(D) The rate of exchange of gas increases

**12.** Given below are two statements, one of which is labelled as Assertion (A) and the other is labelled as Reason (R). Read both the statements carefully : 1

Assertion (A) : When an object or body is moving at a constant velocity, with no changes in speed or direction, it is dynamic equilibrium.

Reason (R) : A cyclist in motion or the body position maintained by a sprinter on the track while running are examples of dynamic equilibrium.

In the context of the above two statements, which one of the following is correct ?

(A) Both Assertion (A) and Reason (R) are true, and Reason (R) is the correct explanation of the Assertion (A).

(B) Both Assertion (A) and Reason (R) are true, but Reason (R) is not the correct explanation of the Assertion (A).

(C) Assertion (A) is true, but Reason (R) is false.

(D) Assertion (A) is false, but Reason (R) is true.

FREE SAMPLE | Buy the complete pack at notesbazar.in | page 28 of 38



**13.** Given below are examples of friction shown in List-I with their respective types of friction in List-II. 1

| List-I (Example of friction) | List-II (Types of friction) |
|---|---|
| (a) Pushing a chair | (i) Sliding friction |
| (b) Sea waves | (ii) Rolling friction |
| (c) Moving heavy (stationary) objects | (iii) Fluid friction |
| (d) Skating | (iv) Static friction |

Which of the following options correctly matches the items of list (I) with those in list (II) ?

| | (a) | (b) | (c) | (d) |
|---|---|---|---|---|
| (A) | (i) | (iii) | (ii) | (iv) |
| (B) | (iv) | (ii) | (i) | (iii) |
| (C) | (i) | (iii) | (iv) | (ii) |
| (D) | (ii) | (i) | (iv) | (iii) |

**14.** Which of the following statements is correct regarding the lever's fulcrum ? 1

(A) It is a point at which the force is applied.
(B) It is a point at which the load is located.
(C) It is a point at which the lever rotates.
(D) It is a point at which efforts are made.

**15.** Given below are two statements, one of which is labelled as Assertion (A) and the other is labelled as Reason (R). Read both statements carefully : 1
Assertion (A) : Actions and responses of two athletes may differ during a match situation.
Reason (R) : Personality is the combination of an Individual's thoughts, characteristics, behaviour, attitude and habits.
In the context of the above two statements, which one of the following is correct ?

(A) Both Assertion (A) and Reason (R) are true, and Reason (R) is the correct explanation of the Assertion (A).
(B) Both Assertion (A) and Reason (R) are true, but Reason (R) is not the correct explanation of the Assertion (A).
(C) Assertion (A) is true, but Reason (R) is false.
(D) Assertion (A) is false, but Reason (R) is true.

**16.** Shweta is over-stressed and anxious as she is preparing for her 'NEET' exam. Which of the following is a suitable reason for her to exercise ? 1

(A) To develop physical strength
(B) Mental Relaxation
(C) For Socialisation
(D) To Reduce the risk of disease

**17.** Which one of the following is NOT correct regarding the training cycle in sports ? 1

(A) A mesocycle is termed as medium duration training.
(B) The duration of a microcycle is 3 to 10 days.
(C) The duration of the mesocycle is 3 to 6 weeks.
(D) The macrocycle has the minimum duration of training.

FREE SAMPLE | Buy the complete pack at notesbazar.in | page 29 of 38



18. Which of the following types of endurance is classified according to the nature of the activity ? 1

(A) Speed endurance
(B) Medium time endurance
(C) Specific endurance
(D) Short-term endurance

## Section B: Short answer (2 marks each)

19. "Sports that require athletes to maintain a specific weight to perform well are at higher risk of developing eating disorders." Justify this statement with your answer. 2

20. Write any four benefits of Nadi-Shodhan pranayama. 2

21. What is the role of Physical Education teachers in promoting inclusion in sports ? 2

22. Explain the procedure of any one strength test of the SAI Khelo India Fitness Test used for 9 to 18 years / class 4 to 12 children. 2

23. In the examples given below, which of the Newton's Law of Motion will apply ? Justify your answer. 2
(a) When a Swimmer pushes the water backwards.
(b) When a cricket and tennis ball are thrown with the same force, the tennis ball moves with greater acceleration.

24. Briefly explain talent selection and talent transfer in the process of talent identification and talent development. 2

## Section C: Short answer (3 marks each)

25. Compare and contrast the intramural and the extramural tournament. 3

26. Devise a plan of physical activities in accordance with World Health Organization guidelines for adults aged 65 and above. 3

27. Enlist the asanas for obesity. Explain the procedure of any one asana for it. 3

28. Prashant began vomiting after lunch at school. He was promptly taken to a nearby doctor, who diagnosed him with food intolerance. Outline three types of food intolerance. 3

29. Elucidate three physiological changes those occur due to ageing. 3

30. Describe three factors those affect the trajectory of a projectile. 3

## Section D: Case-based questions (4 marks each)

FREE SAMPLE | Buy the complete pack at notesbazar.in | page 30 of 38



**31.** Anita prepared a fixture based on the league competition. She distributed this fixture to the coaches of all the teams. When Khushi received this fixture, it was misprinted and showed only the matches of rounds three and four. According to the above statement, study the fixture given below. 4

| III Round | | IV Round | |
|---|---|---|---|
| 5 | Bye | 4 | Bye |
| 4 | 6 | 3 | 5 |
| 3 | 7 | 2 | 6 |
| 2 | 1 | 1 | 7 |

Based on the above fixture and your previous knowledge answer the following questions :

(i) In which round the match between number 4 and 3 teams will be held ?

(ii) How many rounds will be played in the tournament ?

(A) 6 (B) 7

(C) 5 (D) 4

(iii) In which round team number 2 will get a bye ?

(iv) How many matches will be played in the above fixture ?

(A) 21 (B) 23

(C) 19 (D) 18

**OR**

(iv) The other name for a league tournament is _____ .

**(For Visually Impaired Candidates only)**

Keshav, the general secretary of Kabaddi Association of Maharashtra was given the responsibility to organise State level Kabbaddi tournament. He formed four committees i.e., technical committee, finance committee, logistics committee and marketing committee to organise the event systematically and smoothly.

Based on the above case and your previous knowledge, answer the following questions :

(i) Which of the following committee is responsible for publishing the news ?

(A) Technical committee (B) Finance committee

(C) Logistics committee (D) Marketing committee

(ii) Which committee is responsible for maintaining the play fields while organising the tournament ?

(A) Marketing committee (B) Logistics committee

(C) Finance committee (D) Technical committee

(iii) Write any 2 post sports event responsibilities of finance committee ?

**OR**

(iii) Purchase of sports equipment is a function of the _____ committee.

(A) Logistics (B) Finance

(C) Marketing (D) Technical

(iv) _____ committee arranges refreshments, boarding and lodging.

FREE SAMPLE | Buy the complete pack at notesbazar.in | page 31 of 38



**32.** Rohan, a 16-year-old student, got injured after colliding with Sachin during a football match. He was having unbearable pain in his ankle, and it was swollen. The coach noticed a collection of blood outside the blood vessel on Sachin's forehead, too. He immediately gave first aid to both and rushed them to the hospital. 4

Answer the following questions based on the above case and your prior knowledge :

(i) What type of injury did Rohan suffer ?

(A) Strain
(B) Abrasion
(C) Sprain
(D) Laceration

(ii) Sachin had _____ on his forehead.

(A) Contusion
(B) Fracture
(C) Laceration
(D) Incision

(iii) If Sachin suffered abrasion during the injury, which of the following symptoms would he have ?

(A) Tear of Ligament
(B) Rubbing away of upper layer of epidermis
(C) Tear of muscles
(D) Instability of joints

(iv) A fracture in a soft bone, in which the bone bends, is known as _____

(A) Comminuted fracture
(B) Transverse fracture
(C) Greenstick fracture
(D) Oblique fracture

FREE SAMPLE | Buy the complete pack at notesbazar.in | page 32 of 38



**33.** 17-year-old Akriti is a student in class 12. She is deaf and mute by birth. She communicates through lip movements and gestures, and understands others through the same. She has only one friend in the class, Raghav. The other students in the class hesitate to talk and play with her. Whenever there is a team activity in the class, no one except Raghav is willing to include her in his team. As a result, Akriti feels isolated and alone in the class. Raghav approached their physical education teacher, Sarita, about this issue. Sarita gave him some suggestions on how Akriti can be included in the class through physical activities and how she can be made to feel more integrated. 4

Answer the following Questions based on the above case and your prior knowledge :

(i) What type of challenges Akriti is facing ?

(A) Visually impaired
(B) Hearing and speech impaired
(C) Physical disability
(D) Learning disability

(ii) Why does Akriti feel isolated in her physical activity class ?

(A) Because she is not interested in studies.
(B) Because her tacher is not supportive
(C) Because other students hesitate to interact with her.
(D) Due to lack of physical fitness.

(iii) Which of the following is the key principle of inclusive physical education ?

(A) Segregation
(B) Integration
(C) Exclusion
(D) Adaptation

**OR**

(iii) What strategy can be used to facilitate communication with Akriti during physical activities ?

(A) Using loud verbal instructions
(B) Using sign language or gestures
(C) Ignoring her needs
(D) Focusing only on written communication

(iv) How physical activities can be made inclusive to meet Akriti's needs ?

(A) By providing training in comfortable and emotionally secure environment.
(B) By excluding her from activities
(C) By providing separate programs
(D) By focusing only on individual activities

## Section E: Long answer (5 marks each)

**34.** Differentiate between Scoliosis and Lordosis deformities. Suggest corrective measures for Knock-knee and Flat foot deformities. 5

**35.** Raghav plans to conduct strength and flexibility tests specifically for the lower body, targeting his grandfather's friend. Explain in detail the procedure and scoring system to administer these tests. 5

**36.** What do you understand by motivation ? Which motivational techniques are used to improve the performance of the players ? Explain in detail. 5

**37.** What is speed ? Explain the methods to develop speed in detail. 5

## Solutions · CBSE 2026 · 048

FREE SAMPLE | Buy the complete pack at notesbazar.in | page 33 of 38



**Q1** The functions of sports event management come in the order planning → organising → staffing → directing → controlling. After deciding what to do (planning), the work is divided and resources arranged (organising). **(D) Organising**

**Q2** Sports Day is the annual school or community event that showcases the abilities and prowess of children and youth, and also lets community members meet and interact. The runs are for health, fun or a cause, not for showcasing skill. **(C) Sports Day**

**Q3** Postural deformities are medical conditions; their corrective exercises must be prescribed and supervised by a doctor (physician) or a physiotherapist, otherwise wrong exercises can worsen the deformity. **(D)**

**Q4** Kyphosis (hunchback) needs **backward-bending** asanas that open the chest and strengthen the upper back. Dhanurasana, Chakrasana and Bhujangasana are all back-bends; Halasana and Adhomukhasana are forward bends and would worsen it. **(D)**

**Q5** Uttan Mandukasana and Vakrasana appear in the syllabus list for **both** asthma and hypertension. Chakrasana is not in either list, and Supta Vajrasana is listed for diabetes. **(A)**

**Q6** The picture shows the stretched-up "frog" posture: knees wide, arms folded over the head holding the opposite shoulders. **(C) Uttan Mandukasana**. VI: Yogmudra is done sitting in Padmasana with the wrists clasped behind the back, bending forward to touch the forehead to the floor. **(B)**

**Q7** Sir Ludwig Guttmann organised the Stoke Mandeville Games, a competition for **wheelchair** athletes (World War II veterans with spinal injuries), on the opening day of the 1948 London Olympics; it grew into the Paralympics. **(C)**

**Q8** This is the athlete oath of the **Special Olympics** (for persons with intellectual disability), founded by Eunice Kennedy Shriver. **(A)**

**Q9** Protein repairs and builds cells (iii); carbohydrates are the main source of energy (i); fats carry the fat-soluble vitamins A, D, E, K (iv); roughage gives negligible energy (ii). **(D)**

**Q10** BMR is the minimum energy (calories) the body needs at complete rest to keep vital functions going: breathing, heartbeat, circulation, temperature, cell repair. **(D)**

**Q11** The CBSE textbook lists "increased residual volume" (air left in the lungs after forceful expiration) among the long-term effects of regular exercise. A rise in respiratory rate is a short-term (immediate) effect, and stroke volume belongs to the cardiovascular system. **(A)**

**Q12** A is the definition of dynamic equilibrium (balance while moving at constant velocity); R gives correct examples that illustrate it. **(A) Both true, R explains A** (board key).

**Q13** A chair dragged on the floor slides (i); waves move through water: fluid (iii); a heavy object at rest resists starting: static (iv); skates roll on wheels: rolling (ii). **(C)**

**Q14** The fulcrum (axis) is the fixed point about which the lever turns; in the body it is a joint. **(C)**

FREE SAMPLE | Buy the complete pack at notesbazar.in | page 34 of 38



**Q15** Both are true, and because every athlete has a different personality, they react differently to the same match situation. **(A)**

**Q16** Exercise releases endorphins and lowers stress hormones, giving **mental relaxation**, which is what an anxious student needs. **(B)**

**Q17** The macrocycle is the **longest** cycle (several months to a year, or 4 years for Olympics); the microcycle is the shortest. **(D)**

**Q18** By nature of activity, endurance is **basic, general and specific**; by duration it is short-, medium- and long-time endurance. **(C)**

**Q19** (1) In sports where leanness or a weight category decides performance or eligibility, such as gymnastics, figure skating, distance running, wrestling, boxing and weightlifting, athletes are under constant pressure to stay light. (2) To prevent weight gain or keep losing weight, they severely restrict food (anorexia) or binge and then purge, misusing laxatives, diet pills or diuretics (bulimia). This low energy intake is the first part of the female athlete triad and leads to amenorrhoea and weak bones. Hence the risk of eating disorders is higher in such sports.

**Q20** (1) Calms and steadies the mind; improves focus and concentration. (2) Strengthens the immune system. (3) Supplies enough oxygen to every cell of the body. (4) Removes carbon dioxide and other waste gases from the blood. (Also: lowers blood pressure and stress; balances the left and right nostrils.)

**Q21** (1) They give **equal opportunities** to all students, including those with different abilities, in every class and event. (2) They **adapt activities** (rules, equipment, space, time) so that children with special needs can take part with others. (3) They create a supportive environment where every child feels valued, and they praise effort and set achievable tasks to build self-esteem and confidence.

**Q22** **Partial curl-up** (abdominal strength): the student lies on a cushioned flat surface, knees bent at about 90°, feet flat, arms straight by the sides with palms down. On "go", the student raises the trunk in a smooth motion, keeping the arms in position and sliding the fingers forward at least 6 inches along the mat to the second parallel strip, then lowers the trunk until the shoulder blades touch the floor. **Score**: the maximum number of correct curl-ups in **30 seconds** (equipment: cushioned surface with two strips 6 inches apart, stopwatch). (Also correct: push-ups for boys, modified push-ups for girls.)

**Q23** (a) **Third law** (action and reaction): the swimmer pushes water backwards (action); the water pushes the swimmer forward with an equal and opposite force (reaction). (b) **Second law** (acceleration): a = F/m, so for the same force, the lighter tennis ball gets more acceleration than the heavier cricket ball.

**Q24** **Talent selection**: the ongoing process of choosing, at various stages of development, the individuals who show the required performance levels for a sport (through tests, trials and competition results). **Talent transfer**: moving an athlete from one sport to another in which he or she has better chances of success, using the physical, technical and mental qualities already developed (e.g. a gymnast moving to diving).

FREE SAMPLE | Buy the complete pack at notesbazar.in | page 35 of 38



**Q25**

| basis | intramural | extramural |
|---|---|---|
| meaning | organised **within the walls** of one institution (between houses, classes, hostels) | organised **outside the walls**, between two or more institutions (zonal, district, state, national) |
| main aim | to encourage **mass participation** and promote health and recreation | to achieve **high performance** at the highest level |
| feeling developed | integration **within** the institution (group cohesion) | integration **with other** institutions (socialisation) |
| who takes part | all students, not only players | selected players or teams (often chosen through intramurals) |

**Similarity**: both are tournaments that develop fitness, fair play, leadership and sporting values; intramurals are the base for selecting teams for extramurals.

**Q26**

| component | WHO guideline (65+) | example plan |
|---|---|---|
| aerobic | 150–300 min a week moderate, or 75–150 min vigorous, or a mix | brisk walk 30–40 min, 5 days |
| muscle strengthening | major muscle groups, 2 or more days a week | light weights, resistance bands, chair squats: Tue, Fri |
| balance (functional) | 3 or more days a week, to prevent falls | heel-to-toe walk, standing on one leg, tai chi or yoga: Mon, Wed, Sat |
| sedentary time | limit sitting; replace with light activity | gardening, household work, stair use |

Start slowly and increase gradually; elders with medical conditions should be as active as their condition allows, with a doctor's advice.

**Q27**

**Asanas for obesity**: Tadasana, Katichakrasana, Pavanmuktasana, Matsyasana, Halasana, Paschimottanasana, Ardha Matsyendrasana, Dhanurasana, Ushtrasana, Suryabhedan pranayama.

**Tadasana (procedure)**: (1) Stand with feet together or about 10 cm apart, hands by the thighs. (2) Distribute weight equally on both feet. (3) Raise the arms over the head, interlock the fingers and turn the palms upward. (4) Fix the eyes on a point slightly above head level. (5) Inhale, stretch the arms, shoulders and chest upward and raise the heels to come up on the toes. (6) Stretch the whole body without losing balance; hold the breath and position for a few seconds. (7) Exhale, lower the heels and bring the hands down. Repeat 5–10 times.

**Q28**

(1) **Absence of an enzyme**: enzymes are needed to digest food fully; if one is missing or insufficient, e.g. lactase for milk sugar (lactose intolerance), the food is not digested and causes vomiting, gas or diarrhoea. (2) **Chemical causes**: certain chemicals in food and drink, such as amines in some cheeses and caffeine in coffee, tea and chocolate, cause intolerance in sensitive people. (3) **Salicylates**: derivatives of salicylic acid that plants make to protect themselves from bacteria, fungi and insects; found in many fruits, vegetables, spices and herbs, they cause reactions in sensitive people. (Also: food poisoning toxins, gluten intolerance, food additives.)

FREE SAMPLE | Buy the complete pack at notesbazar.in | page 36 of 38



**Q29** (1) **Reduction in muscular strength**: muscle mass and strength peak between 20 and 40 years, when muscle cross-section is largest, then decline steadily. (2) **Decrease in neural function**: about 40% fewer spinal cord axons and about 10% slower nerve conduction, so reaction time and coordination worsen. (3) **Endocrine dysfunction**: glands secrete less hormone and target organs respond less, affecting metabolism and growth. (Also: lower pulmonary function and vital capacity, lower maximum heart rate and cardiac output, more body fat, loss of bone mass.)

**Q30** (1) **Gravity**: pulls the projectile downward all the time, so its path is a curve (parabola); it limits height and distance. (2) **Speed of release**: the faster the object is thrown or hit, the farther it travels; muscle force largely determines this speed. (3) **Angle of release**: the pitch at which it is released; 45° gives maximum horizontal distance when release and landing heights are equal. (Also: **height of release**: a higher release gives a longer flight; **spin** and air resistance.)

**Q31** The fixture is drawn by the **cyclic method** for **7 teams** (teams 1–7 appear, plus a bye because the number is odd). The bye stays fixed at the top right; in each round the other numbers move one place. Working backwards and forwards from rounds III and IV gives the full fixture:

| I | II | III | IV | V | VI | VII |
|---|---|---|---|---|---|---|
| 7–Bye | 6–Bye | 5–Bye | 4–Bye | 3–Bye | 2–Bye | 1–Bye |
| 6–1 | 5–7 | 4–6 | 3–5 | 2–4 | 1–3 | 7–2 |
| 5–2 | 4–1 | 3–7 | 2–6 | 1–5 | 7–4 | 6–3 |
| **4–3** | 3–2 | 2–1 | 1–7 | 7–6 | 6–5 | 5–4 |

(i) Teams 4 and 3 meet in the **first round**. (ii) For an odd number of teams, rounds = number of teams = 7. **(B) 7**. (iii) The bye passes to the next lower number each round (7, 6, 5, 4, 3, 2, 1), so team 2 gets the bye in the **sixth round**. (iv) Matches = n(n − 1)/2 = 7 × 6/2 = 21. **(A) 21**. **OR** (iv) **Round robin tournament**.

*VI alternative:* (i) Publicity, press releases and media work belong to the **(D) Marketing committee**. (ii) Layout, cleaning and maintenance of fields is done by the **(D) Technical committee**. (iii) After the event the finance committee (1) examines all records related to the settlement of bills, and (2) keeps track of accounts and prepares the financial report. **OR** (iii) **(B) Finance**: the finance committee purchases equipment, stationery, medals and certificates as requisitioned by other committees. (iv) **Logistics** committee (refreshment, boarding and lodging, transport).

**Q32** (i) Pain and swelling at a joint after twisting means a ligament injury: **(C) Sprain**. (ii) Bleeding under the skin from a blow is a bruise: **(A) Contusion**. (iii) An abrasion is a scrape that rubs away the top layer of skin: **(B)**. (iv) **(C) Greenstick fracture**, common in children whose bones are soft.

**Q33** (i) **(B) Hearing and speech impaired**. (ii) **(C)**: the case says the others hesitate to talk and play with her. (iii) **(B) Integration**: children with special needs take part together with others. **OR** (iii) **(B) Sign language or gestures** (also visual signals, demonstrations, flags instead of whistles). (iv) **(A)**: a comfortable, emotionally secure environment where she is accepted by peers.

**Q34**

FREE SAMPLE | Buy the complete pack at notesbazar.in | page 37 of 38



| scoliosis | lordosis |
|---|---|
| abnormal **sideways** curvature of the spine, forming a "C" or "S" shape | excessive **inward (forward)** curvature of the spine, in the lumbar (lower back) region |
| signs: uneven shoulders, hips or rib cage; body leans to one side | signs: "swayback" posture; abdomen pushed forward; buttocks stick out |

**Flat foot** (corrective measures): walking, standing or jumping on toes and heels; skipping on toes; picking up marbles or a towel with the toes; asanas such as Vajrasana and Adhomukhasana; arch-supporting shoes.
**Knock-knees**: horse riding; keeping a pillow between the knees and squeezing it; asanas such as Padmasana and Gomukhasana; swimming and cycling; weight control.

**Q35** **Chair Stand Test** (lower-body strength, Rikli and Jones): an armless chair is placed against a wall. The person sits in the middle, back straight, arms crossed over the chest, feet flat on the floor shoulder-width apart. On "go" the person stands up fully and sits down again, as many times as possible in **30 seconds**. **Score**: number of complete stands in 30 s; if the person is more than halfway up when time ends, it counts as a stand.
**Chair Sit-and-Reach Test** (lower-body flexibility): the person sits on the front edge of a chair placed against a wall, one foot flat on the floor, the other leg extended forward with the knee straight, heel on the floor and ankle bent at 90°. With one hand on the other, the person bends at the hip and slides the hands down the leg towards the toes, holding for 2 seconds. **Score**: distance between the tips of the middle fingers and the toe, to the nearest 0.5 inch: "+" if the fingers go beyond the toe, "−" if they do not reach it, 0 if they just touch. Best of two trials.

**Q36** **Motivation**: "the driving force that spurs a person to action; a process to initiate, guide and maintain behaviour over time" (Robert Baron). Simply, it is the direction and intensity of effort.
**Techniques**: (1) **Expectancy**: players are motivated for tasks where success is more likely than failure, so the coach sets tasks matched to ability. (2) **Guided discovery**: players are more motivated when allowed to find solutions themselves instead of just following orders. (3) **Social support**: support of family, peers and spectators and a friendly environment keep players going. (4) **Incentives and rewards**: prizes, praise, recognition and scholarships sustain effort over a long time. (Also: goal setting, knowledge of results and feedback, fun-based training, individualised programmes, verbal encouragement.)

**Q37** **Speed**: "the capacity of an individual to perform successive movements of the same pattern at a fast rate", or the ability to move the body or a body part as fast as possible in the minimum time.
**(1) Acceleration runs**: used to develop the ability to reach maximum speed from a static start. The athlete runs a set distance (e.g. 30–60 m), trying to gain full speed as early as possible, and finishes the distance at that speed. Runs are repeated with full rest between them; the number depends on age, capacity and fitness.
**(2) Pace runs**: running a set distance at a uniform (steady) speed, used for races of 800 m and above. The athlete runs at a maximum steady speed over a distance 10–20% longer than the racing distance, so that the pace can be held throughout the race. Repetitions are fixed by fitness level, with complete recovery between them.

FREE SAMPLE | Buy the complete pack at notesbazar.in | page 38 of 38



Notes Bazar

# All the best for your boards!

Complete chapter-wise notes, NCERT solutions and more at **notesbazar.in**